NOVEL
TL72218

LAMPS

PROJECT

DESCRIPTION

Pure geometry of the disks of illumination balancing on clean, thin lined structure is poetry in motion. Each disk of illumination can turn and twist to fit the needs and style of your space. The Novel Collection fits a large range of style and function with minimal elements. Available with both cordless charger and USB charging port.

SPECIFICATION DETAILS

Fixture Dimensions	L6-1/8" x W5-1/4" x H18-1/2"
Light Source	LED with DC Driver
Wattage	27W
Total Lumens	1270lm
Delivered Lumens	BK-1000lm
Voltage	120V
Color Temperature	3000K
CRI (Ra)	90CRI
Optional Color Temps	2700K - 5000K Available, Minimum Order Quantities Apply
LED Rated Life	50,000 hours
Dimming	100% - 10%, Touch dimmer
Diffuser Details	Acrylic Light Guide
Location	Dry
Finish Option(s)	Black

* For custom options, consult factory for details.
* For warranty information, please visit www.kuzcolighting.com/warranty

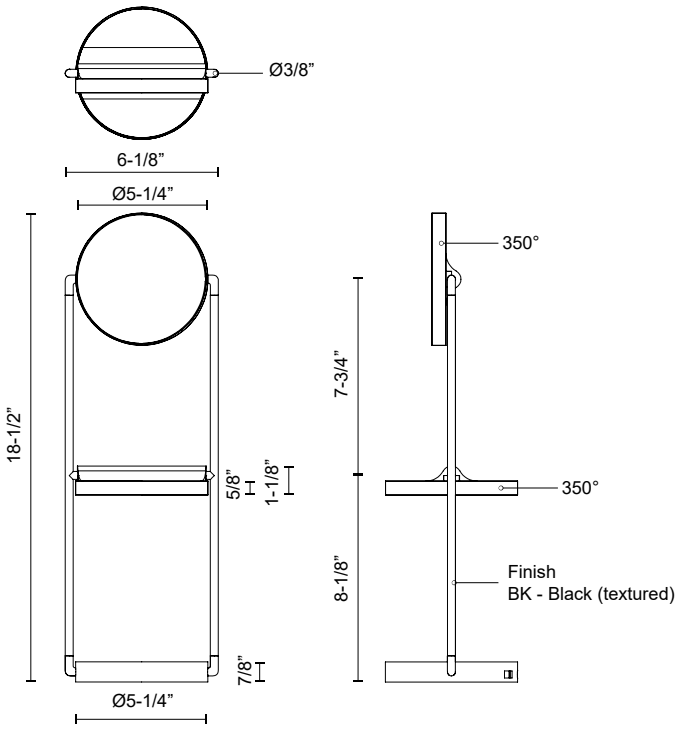

KUZCO

CANADA: 19054 28TH AVENUE - SURREY, BC V3Z 6M3
USA: 3035 E. LONE MOUNTAIN ROAD - LAS VEGAS, NV 89081

WWW.KUZCOLIGHTING.COM

© 2021 KUZCO LIGHTING. ALL RIGHTS RESERVED.

COMMENT

Intertek